KAIFU

CHANGZHOU HANGZHOU KAIFU POWER TRANSMISSION

Persistently create value for customers

Kaifu Power Transmission is committed to
providing precision transmission solutions
that meet or exceed customer needs,
unleash the potential power of products,
brands and markets to support customers achieve marketing growth.





KAIFU specializes in R&D and manufacturing of all kinds gearboxes for agricultural implements including flail mowers、haying equipments、rotary tillers、rotary cutters、post hole diggers,snow blower,etc.

Flail Mowers Gearbox

KF025R290Z0100 04
KF025R290Z0200 05
KF030R300Z0100 06
KF050R300Z0100 07
KF075R283Z0100 08
KF102R300Z0100 09

Haying Equipment Gearbox

KF011R885J0100 10
KF041R266Z0600 11
KF102R300Z0200 12
KF120R192J0100 13

Post Hole Diggers Gearbox

KF040R318J0100 14

Rotary Tillers Gearbox

KF023R146J0100 15
KF040R146J0100 16
KF040R146J0500 17
KF050R169J0100 18
KF065R186J0100 19
KF100R157J0100 20

Rotary Cutters Gearbox

KF030R283Z0100 21
KF040R192Z0100 22
KF050R169Z0100 23
KF060R193Z0100 24
KF075R192Z0100 25

Snow Blower Gearbox

KF038R100J0100 26

KAIFU



KF025R290Z0100

Ratio:	1： 2.9
Input power:	25HP/18.3kw
Weight:	14.5kg

Apply to: Flail Mowers

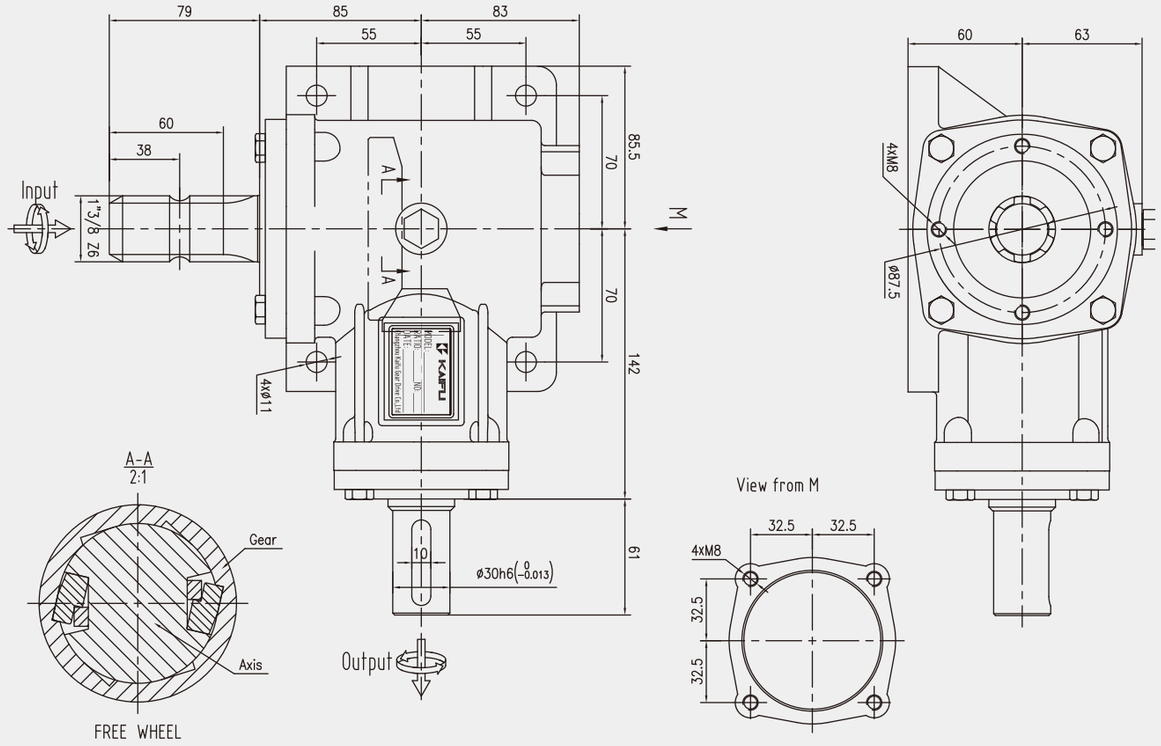

KF025R290Z0200

Ratio:	1： 2.9
Input power:	25HP/18.3kw
Weight:	14.5kg

Apply to: Flail Mowers

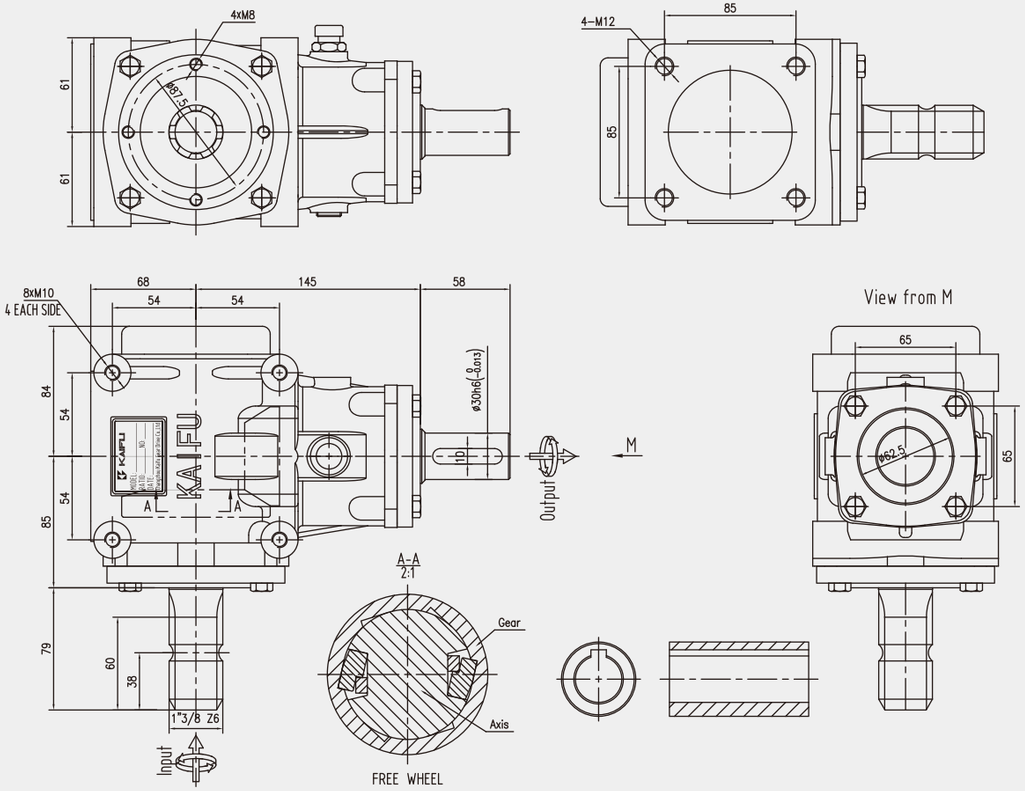



KAIFU



KF030R300Z0100

Ratio:	1：3
Input power:	30HP/22kw
Weight:	20kg

Apply to: Flail Mowers

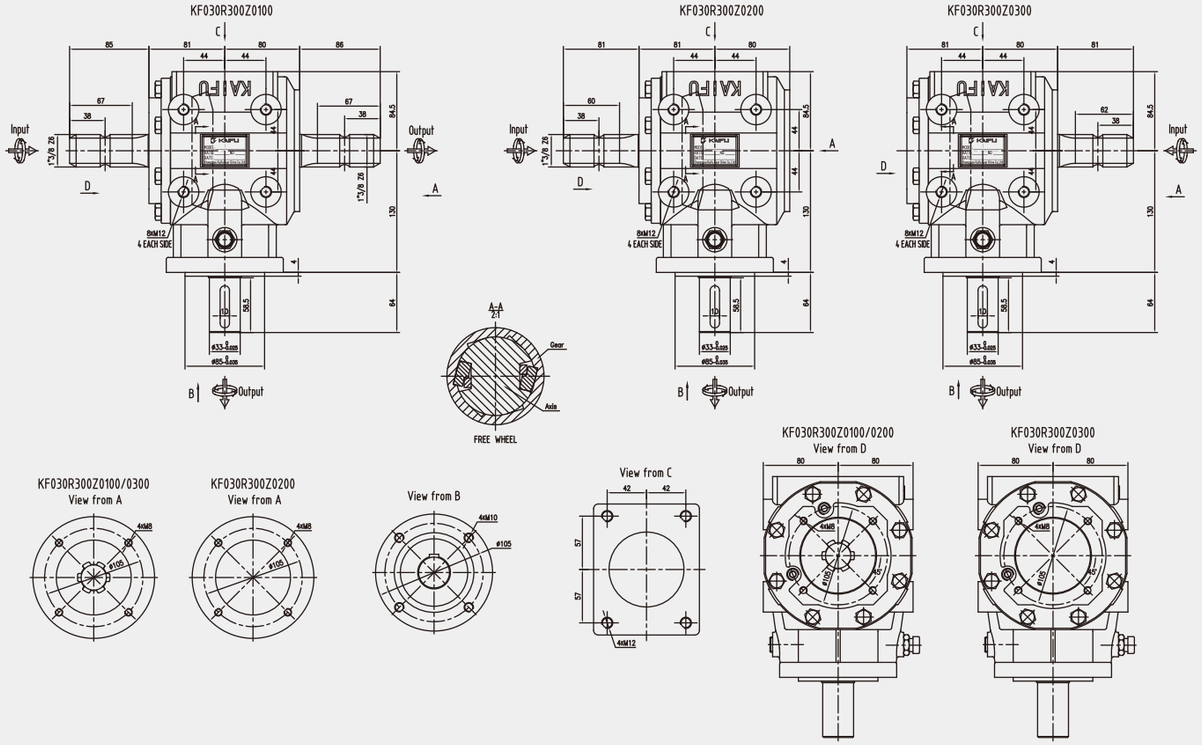

KF050R300Z0100

Ratio: 1 : 3

Input power: 50HP/36.7kw

Weight: 22kg

Apply to: Flail Mowers



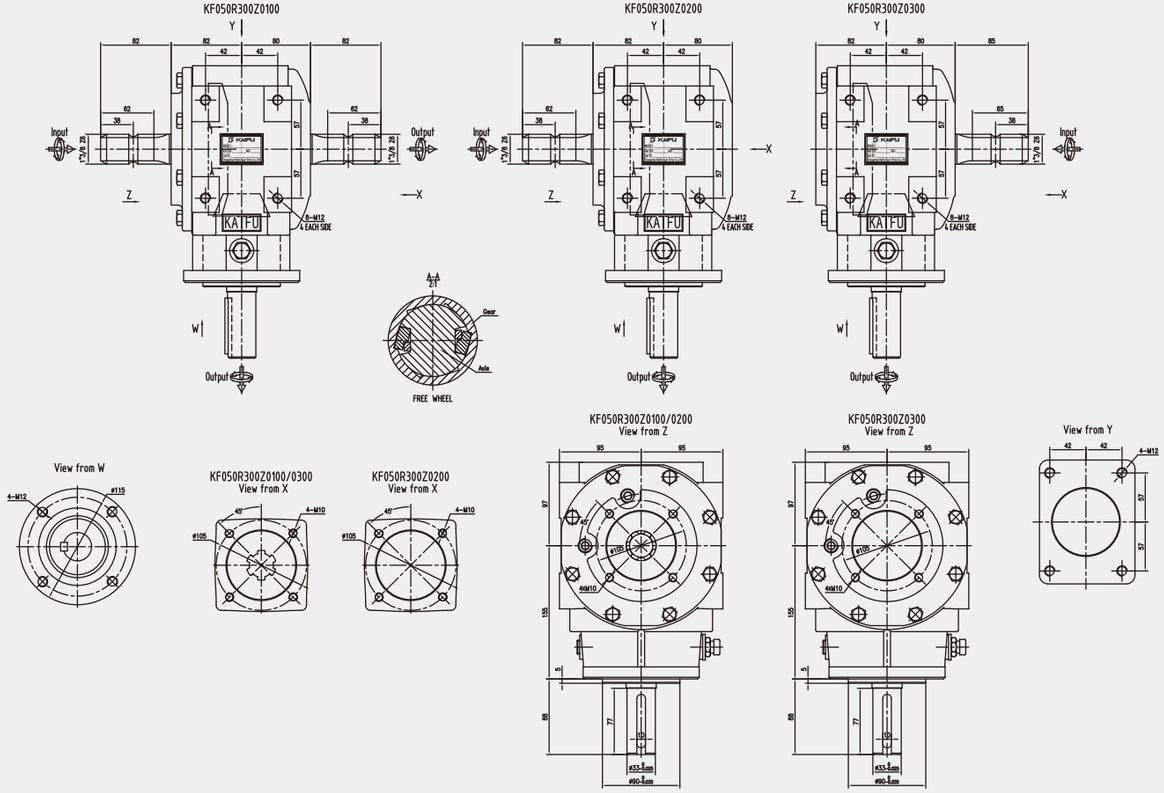

KAIFU



KF075R283Z0100

Ratio:	1： 2.83
Input power:	75HP/55kw
Weight:	34.5kg

Apply to: Flail Mowers

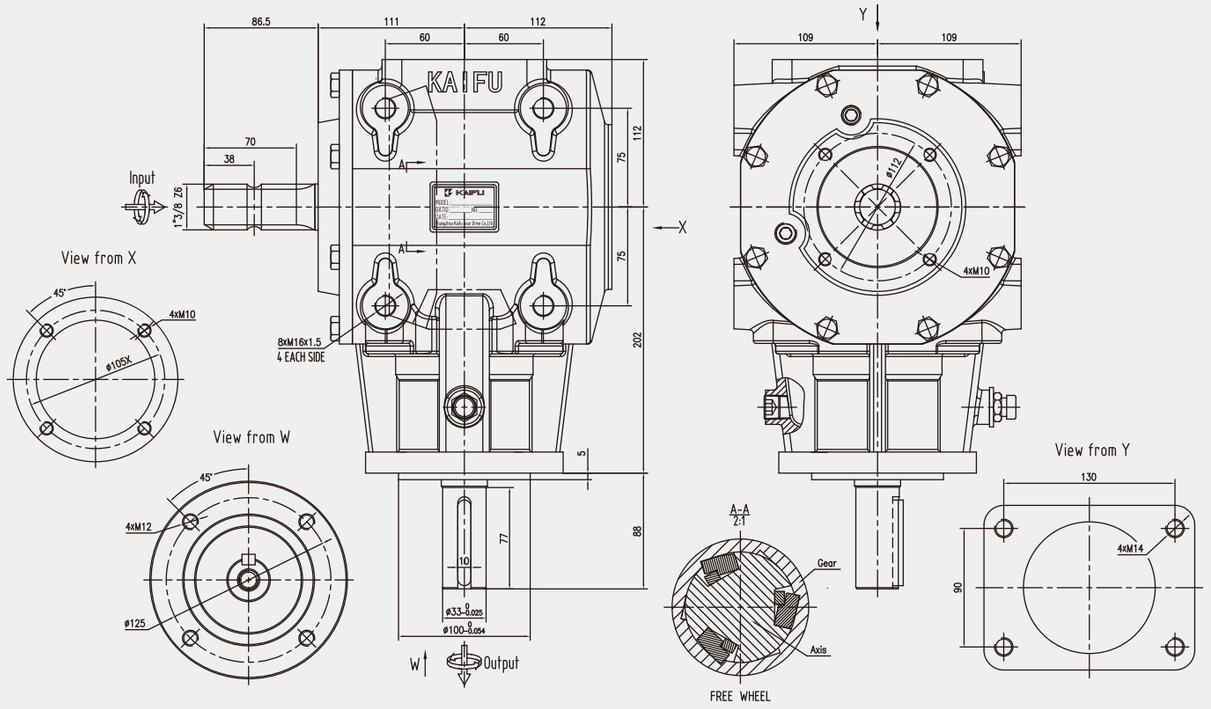

KF102R300Z0100

Ratio:	1： 3
Input power:	102HP/75kw
Weight:	48kg

Apply to: Flail Mowers

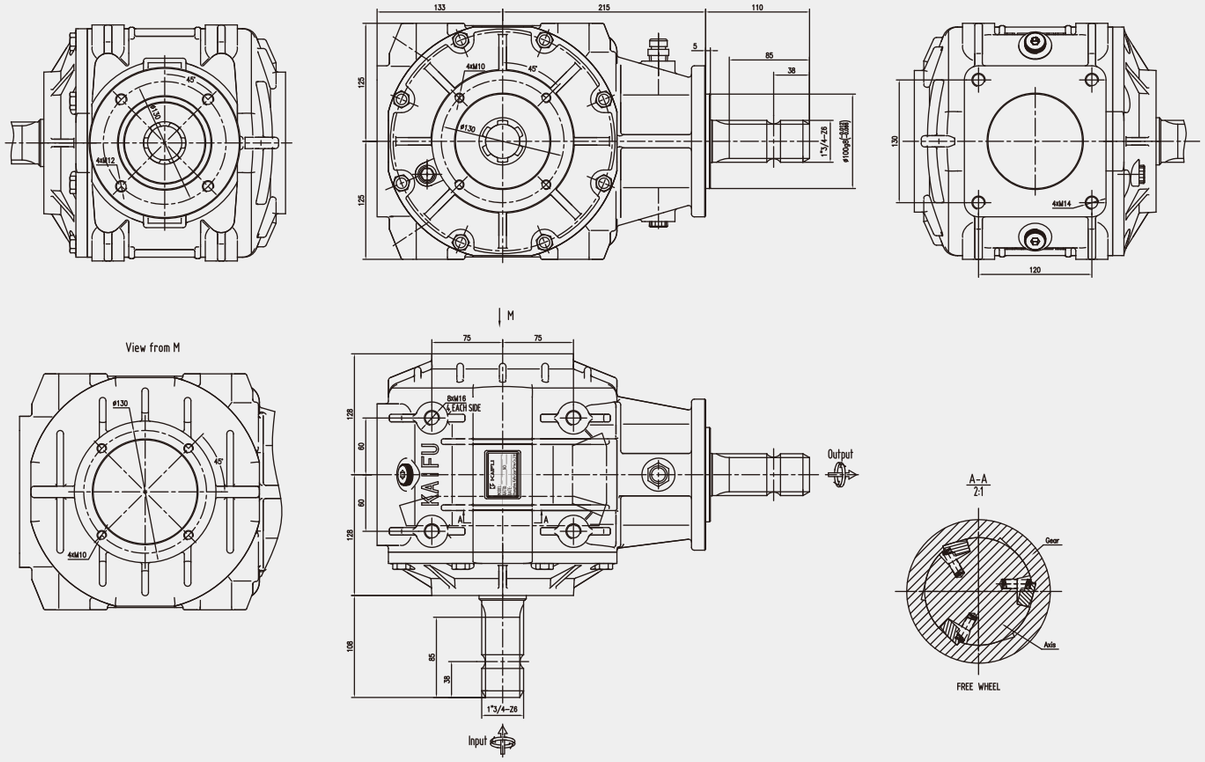



KAIFU



KF011R885J0100

Ratio:	8.55 : 1
Input power:	26HP/19KW
Weight:	107.5KG

Apply to: Rotary Rake

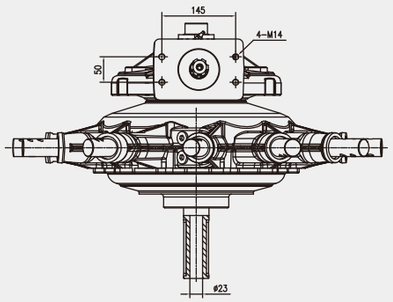

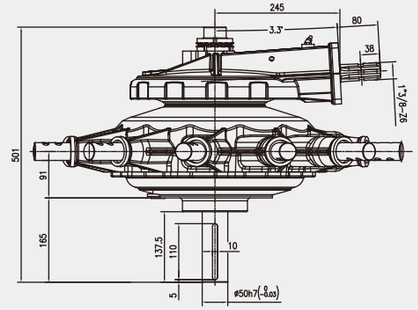

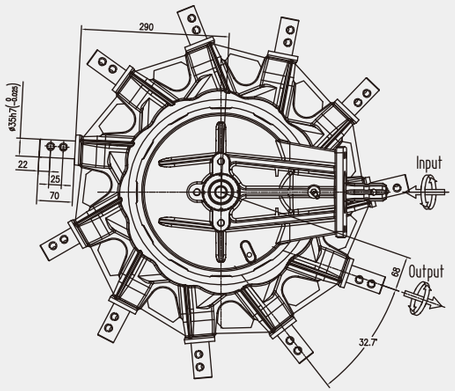

Left
KF011R885J0200

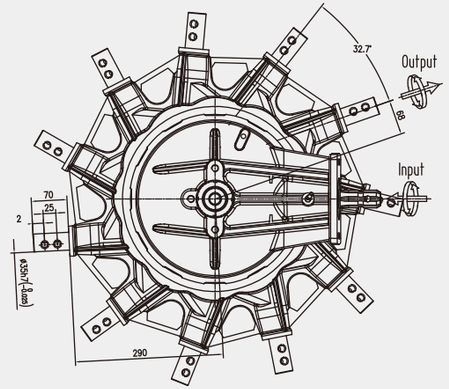

Right/Central
KF011R885J0100

KF041R266Z0600

Ratio:	1： 2.66
Input power:	41HP/30KW
Weight:	210KG

Apply to: Disc Mower

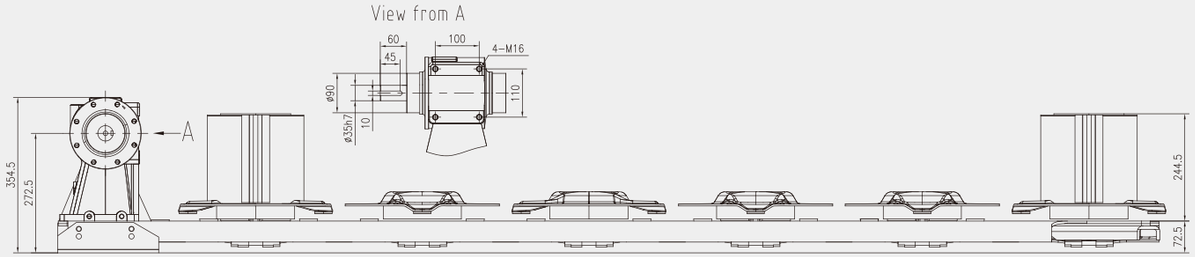

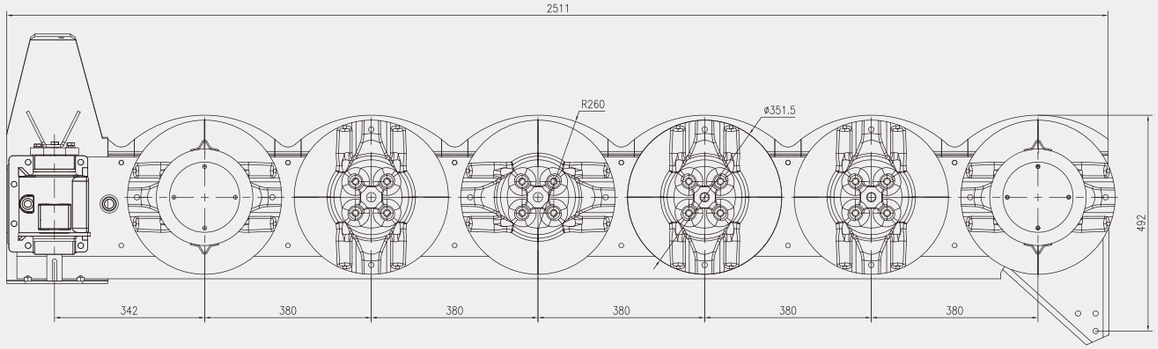



KAIFU



KF102R300Z0200

Ratio:	1： 3
Input power:	102HP/75kw
Weight:	58.5kg

Apply to: Round Baler

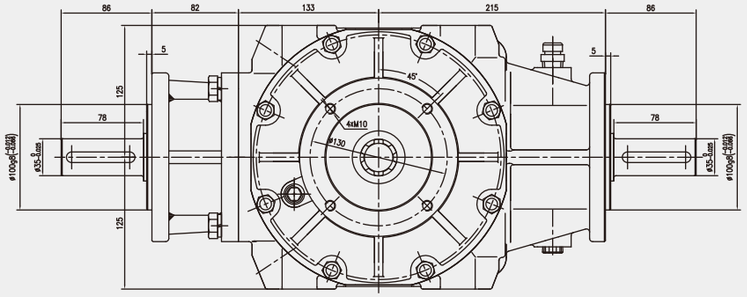

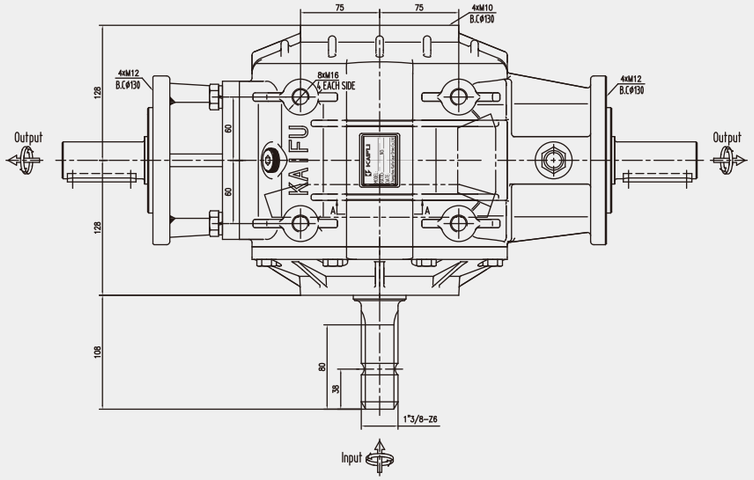

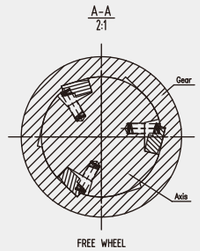

KF120R192J0100

Ratio:	1.92：1
Input power:	120HP/88KW
Weight:	211KG

Apply to: Round Baler

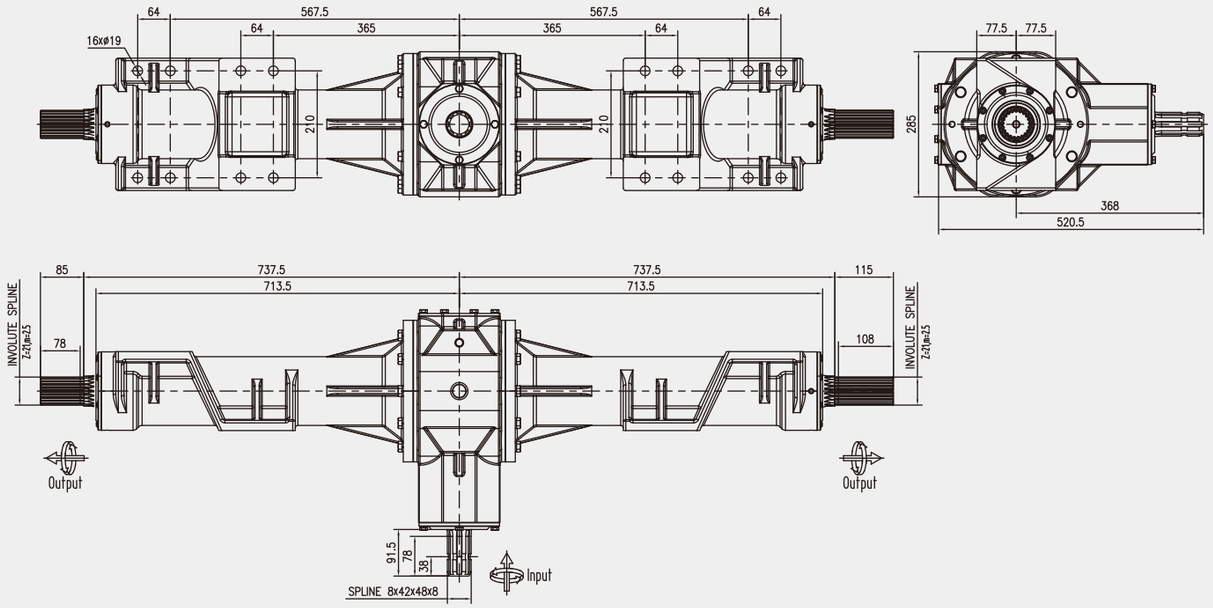



KAIFU



KF040R318J0100

Ratio:	3.18：1
Input power:	40HP/29.4kw
Weight:	31kg

Apply to: Post Hole Diggers

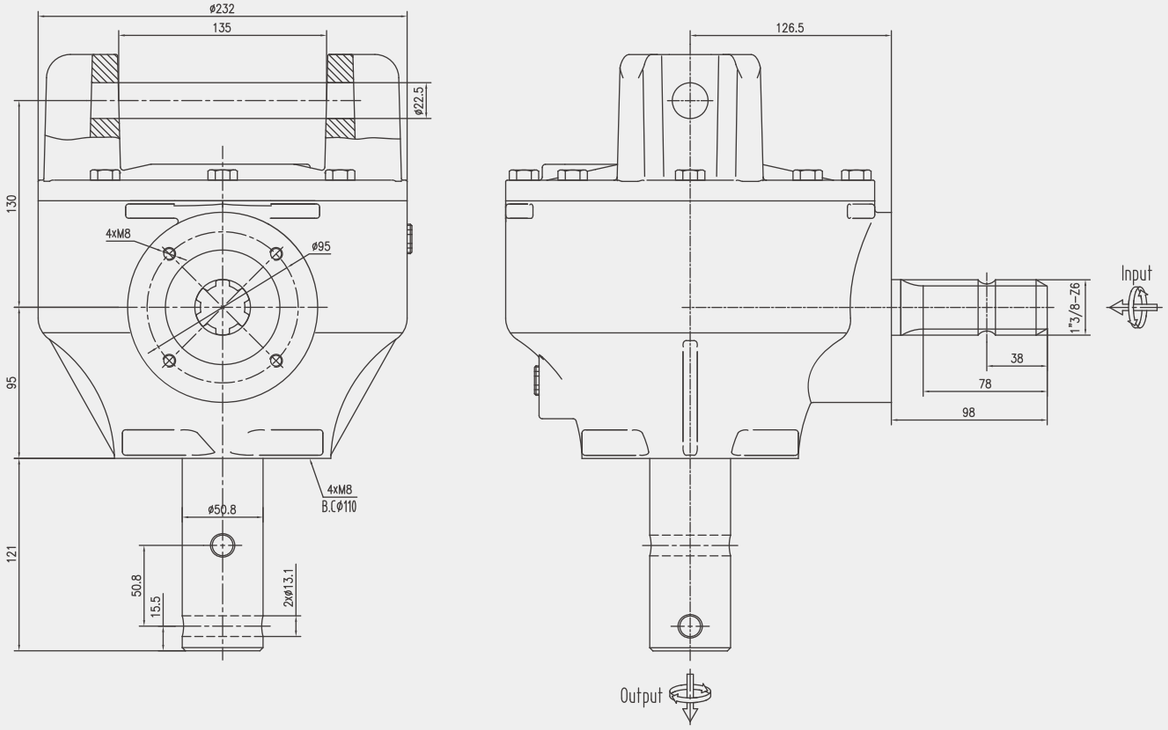

KF023R146J0100

Ratio:	1.46 : 1
Input power:	23HP/17kw
Weight:	11.5kg

Apply to: Rotary Tillers

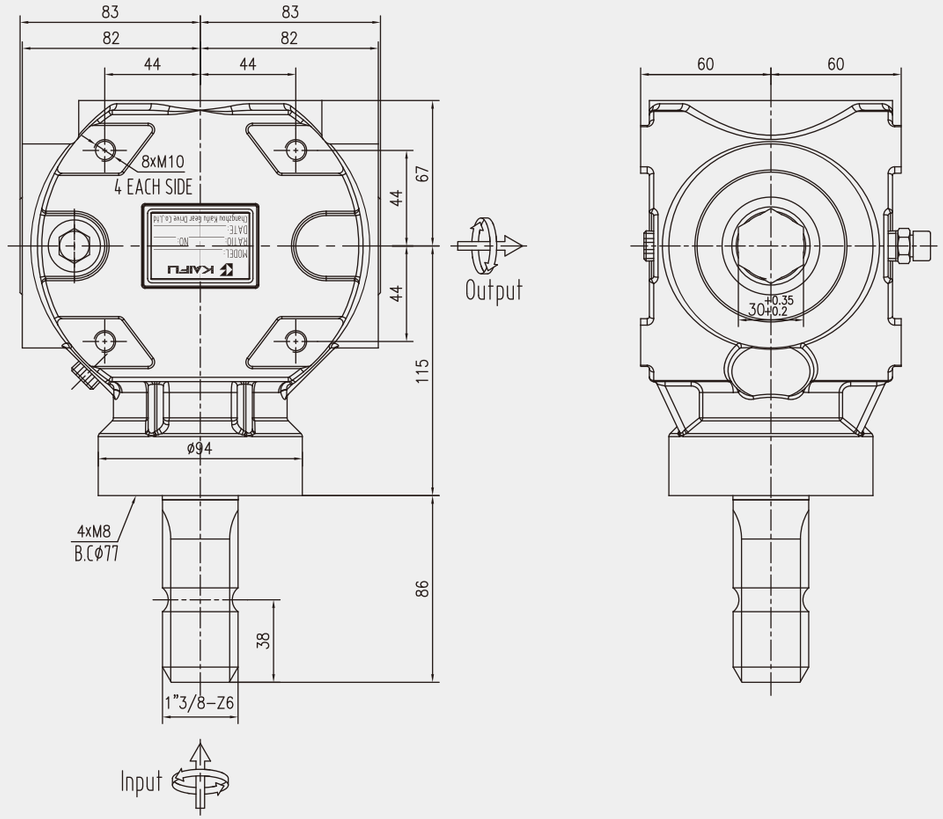



KAIFU



KF040R146J0100

Ratio:	1.46： 1
Input power:	40HP/29.4kw
Weight:	18.5kg

Apply to: Rotary Tillers

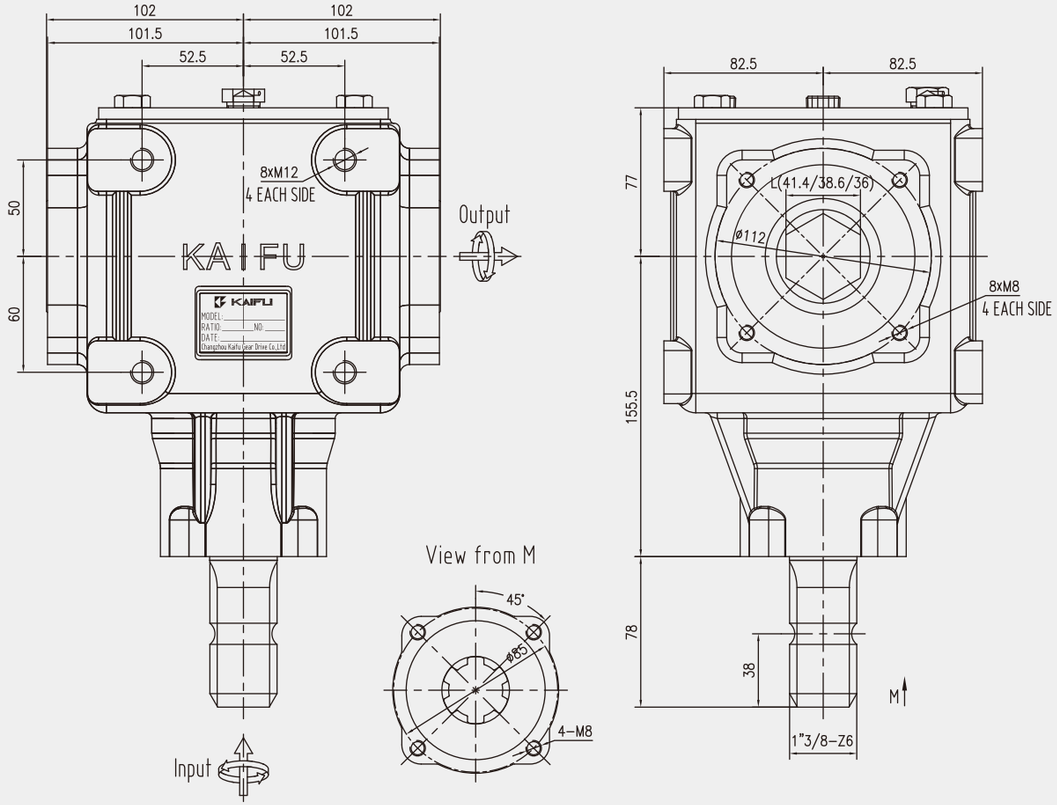

KF040R146J0500

Ratio:	1.46 : 1
Input power:	40HP/29.4KW
Weight:	27KG

Apply to: Rotary Tillers

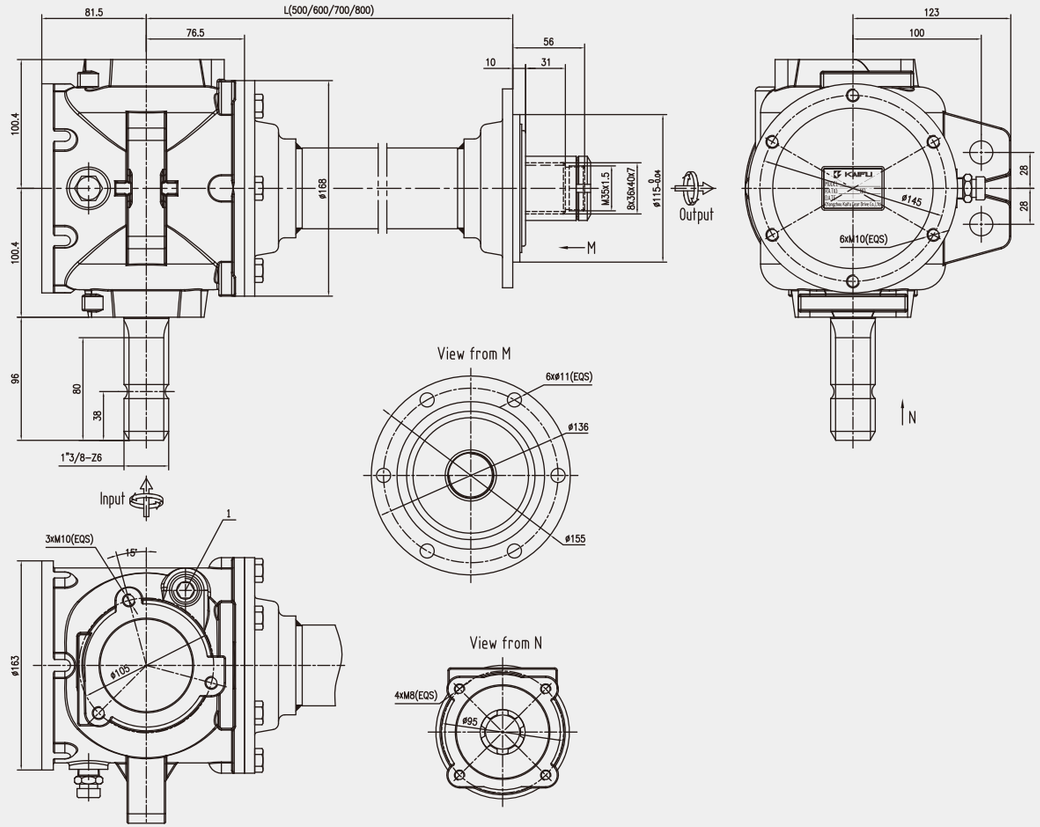



KAIFU



KF050R169J0100

Ratio:	1.69 : 1
Input power:	50HP/37.3kw
Weight:	43kg

Apply to: Rotary Tillers

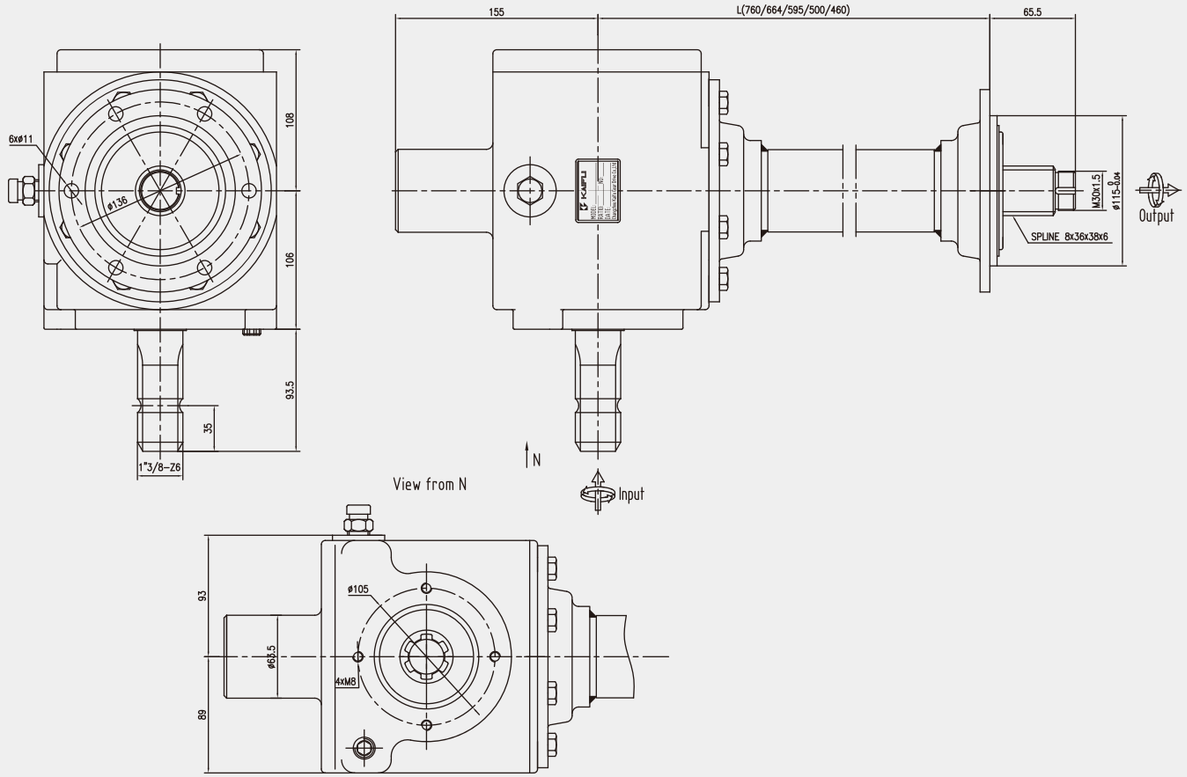

KF065R186J0100

Ratio:	1.86 : 1
Input power:	65HP/47.8kw
Weight:	62kg

Apply to: Rotary Tillers

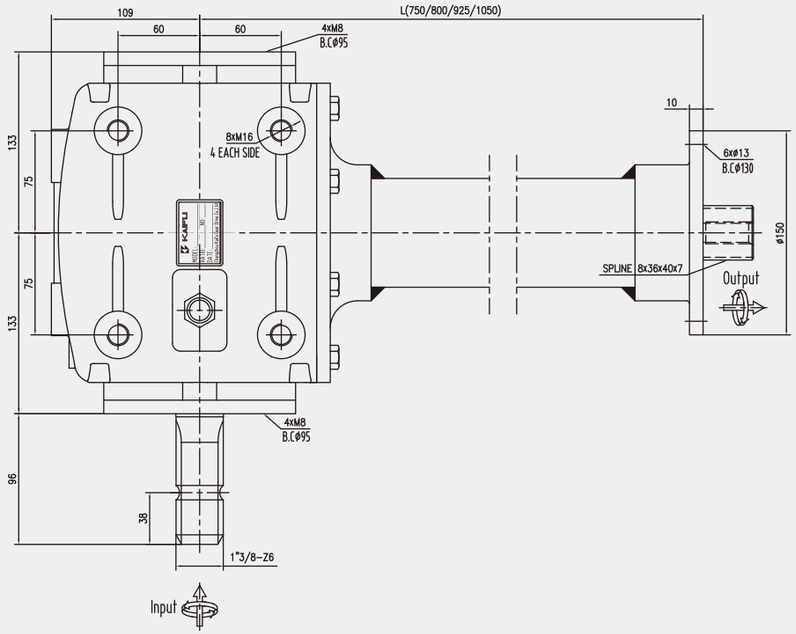

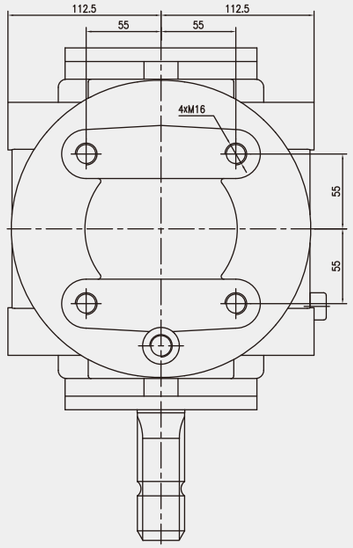



KAIFU



KF100R157J0100

Ratio:	1.57：1
Input power:	100HP/73.5kw
Weight:	46kg

Apply to: Rotary Tillers

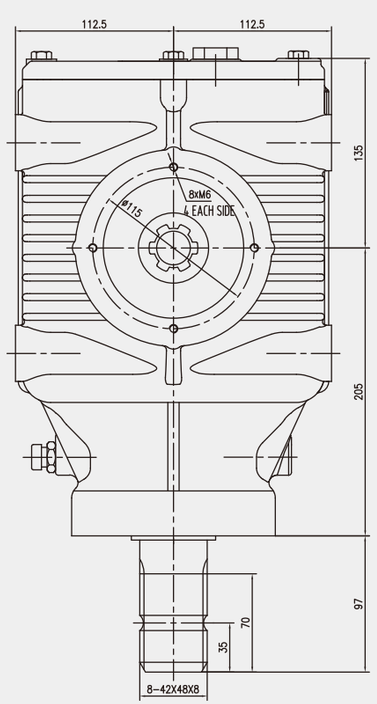

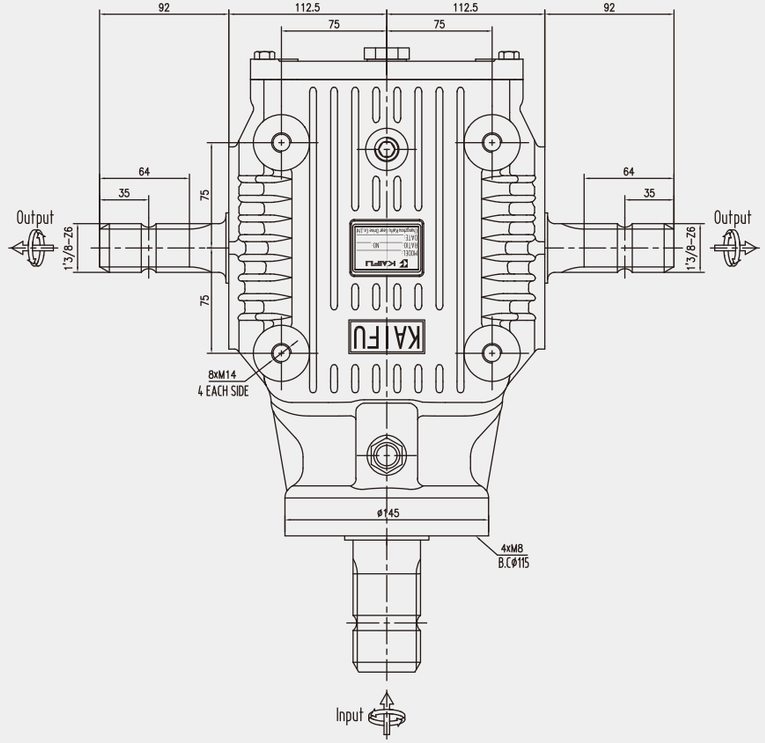

KF030R283Z0100

Ratio:	1： 2.83
Input power:	30HP/22kw
Weight:	17.5kg

Apply to: Rotary Cutters

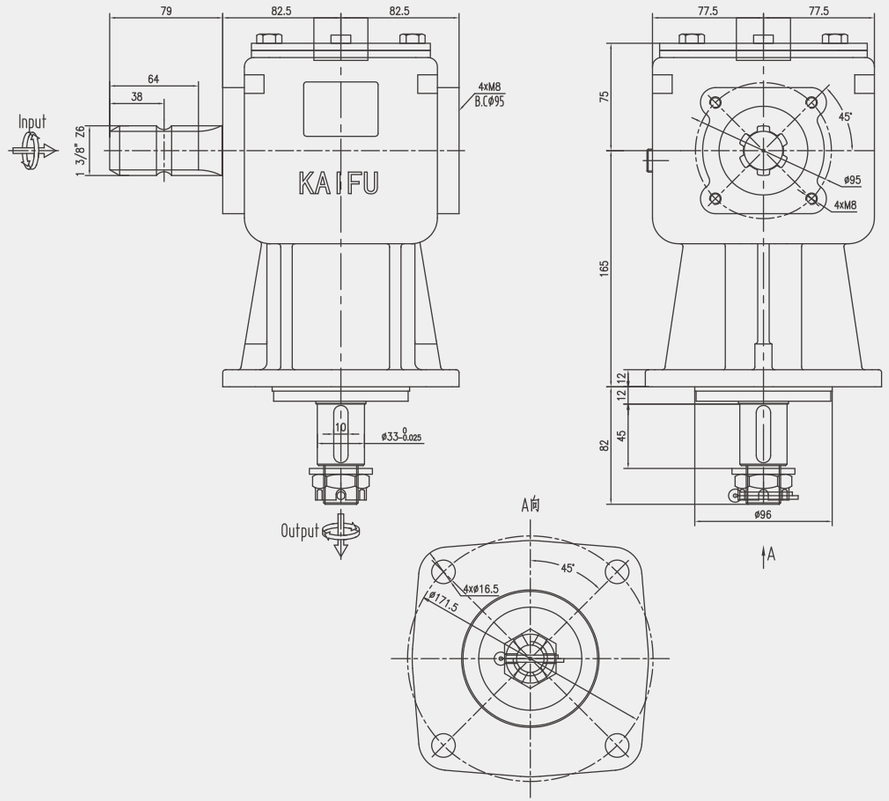



KAIFU



KF040R192Z0100

Ratio:	1： 1.92
Input power:	40HP/29.4kw
Weight:	23.5kg

Apply to: Rotary Cutters

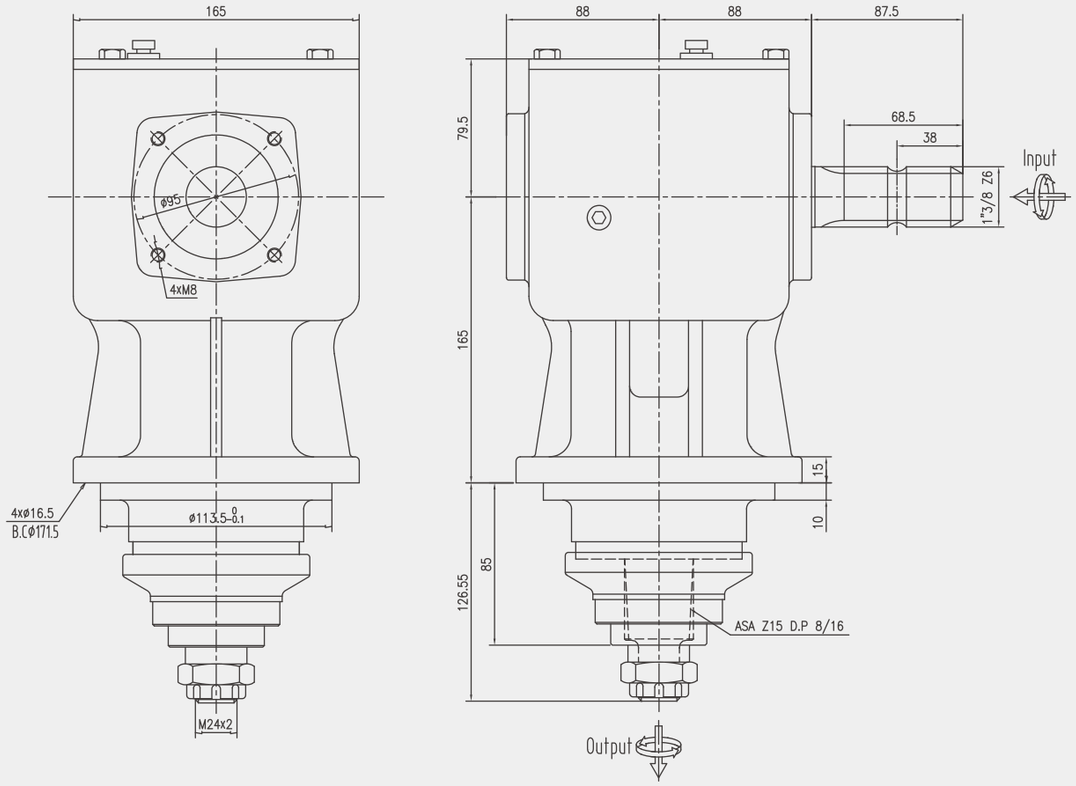

KF050R169Z0100

Ratio:	1： 1.69
Input power:	50HP/36.7kw
Weight:	30kg

Apply to: Rotary Cutters

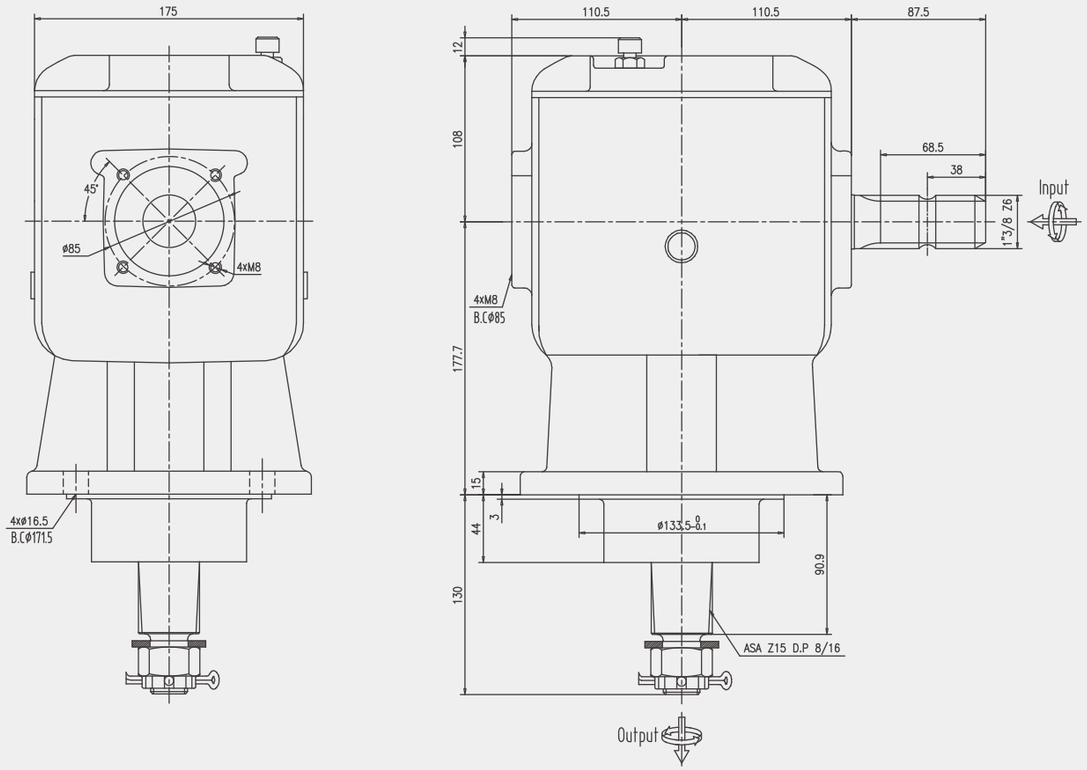



KAIFU



KF060R193Z0100

Ratio:	1： 1.93
Input power:	60HP/44kw
Weight:	30.5kg

Apply to: Rotary Cutters

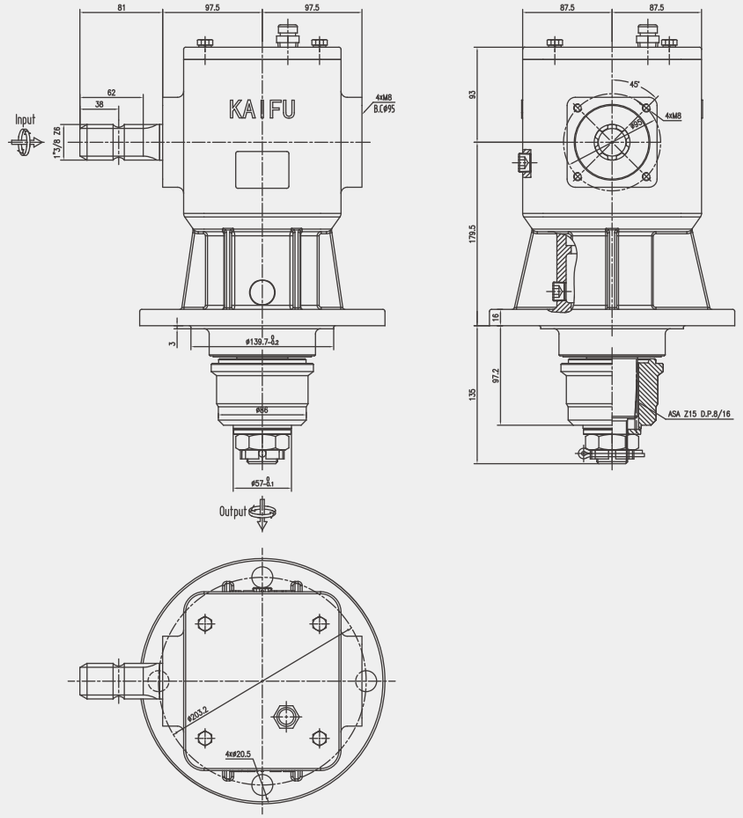

KF075R192Z0100

Ratio:	1： 1.92
Input power:	75HP/55kw
Weight:	36.5kg

Apply to: Rotary Cutters

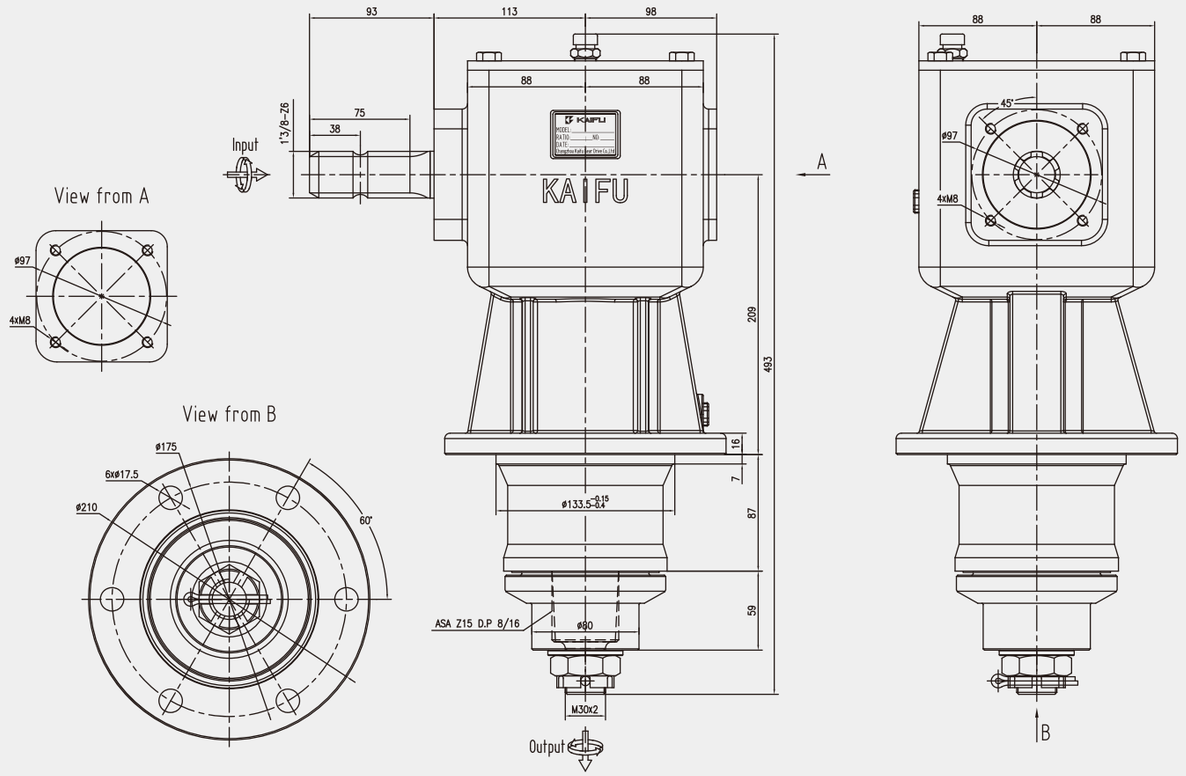



KAIFU



KF038R100J0100

Ratio:	1：1
Input power:	38HP/28KW
Weight:	16.5KG

Apply to: Snow Blower

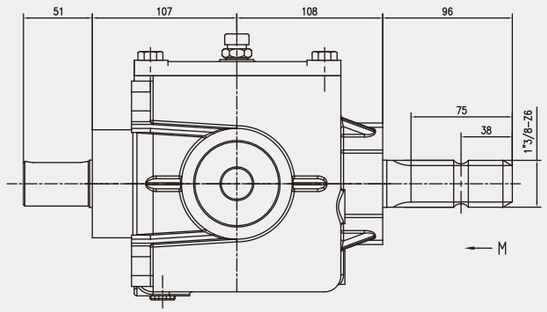

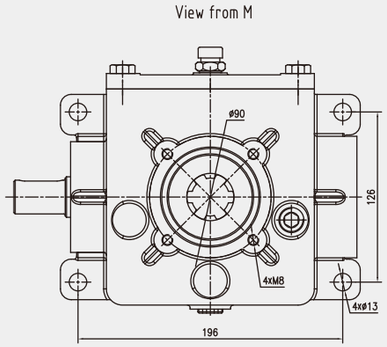

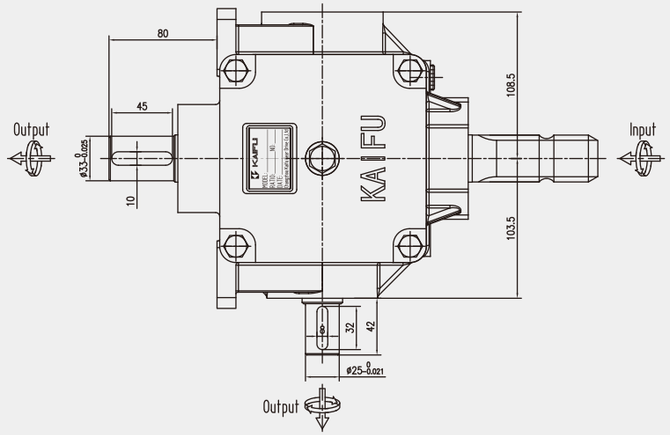

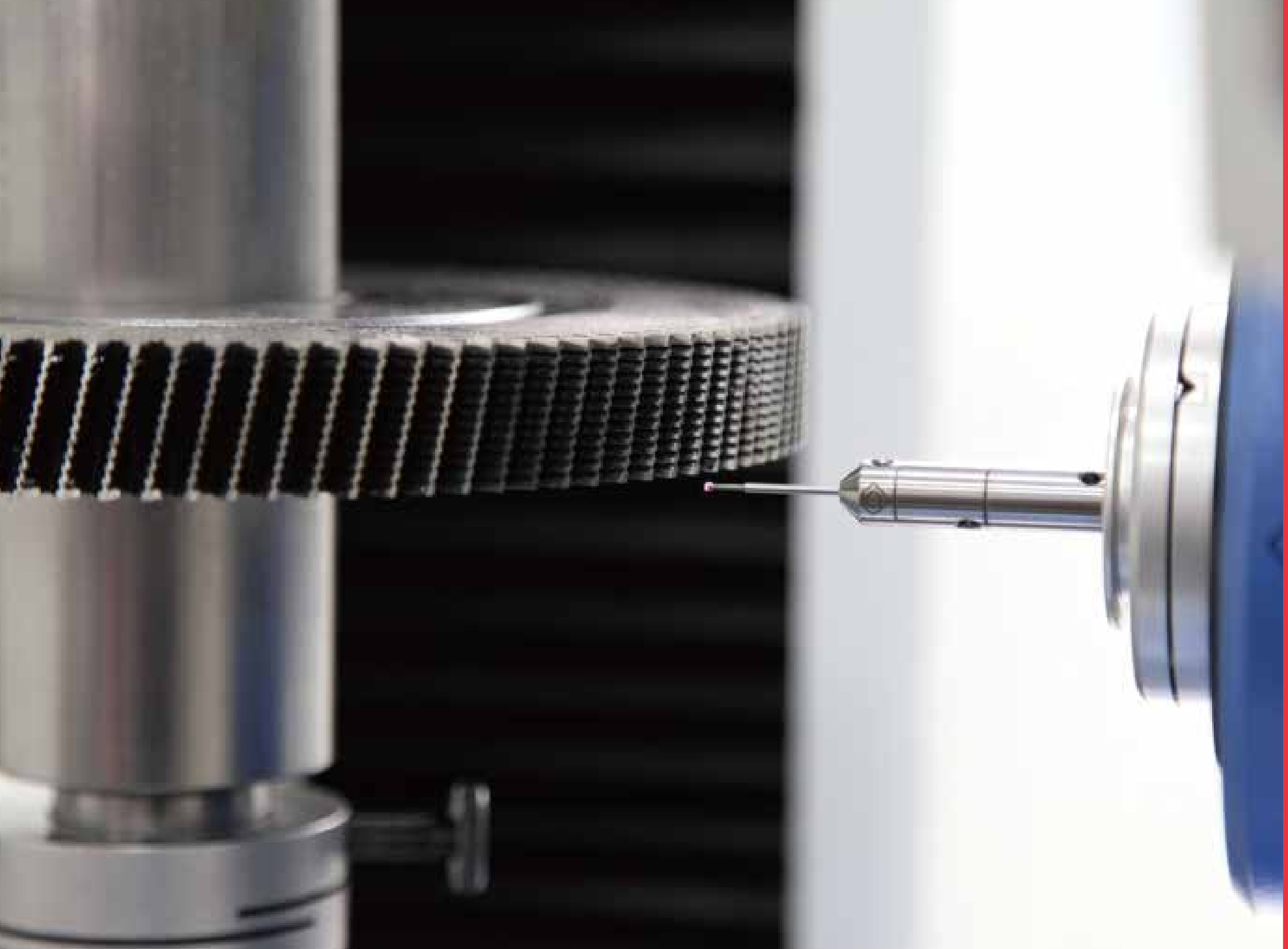

Consistent-
ly high
standards
are
maintained
in all pro-
cesses.

KAIFU

Changzhou KAIFU Power Transmission Co. Ltd.

Add:
55# zengjia,jiaze town,
wujin district,changzhoucity,jiangsu province,
P.R.of China.of China

Email:
kf@kaifuindustries.com